Advanced Analog Circuits

## Packaging Information

### Mechanical Dimensions

**TSSOP-14** **Unit: mm(inch)**

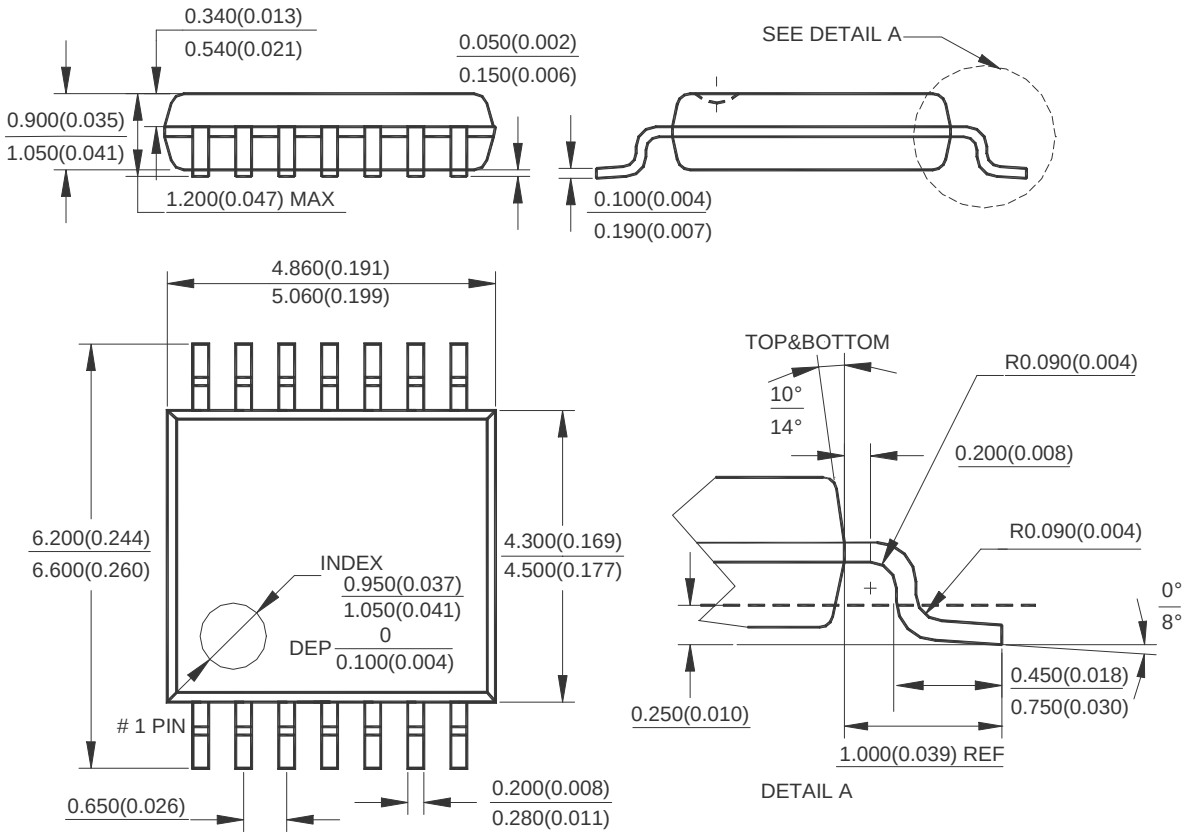

## Packaging Information
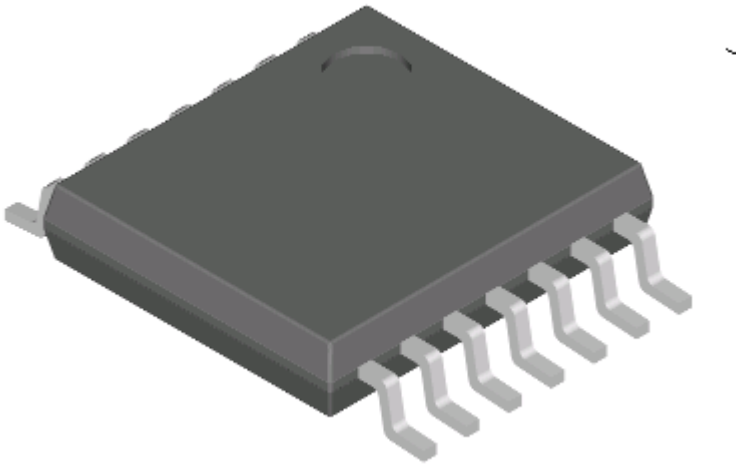
**TSSOP-14**